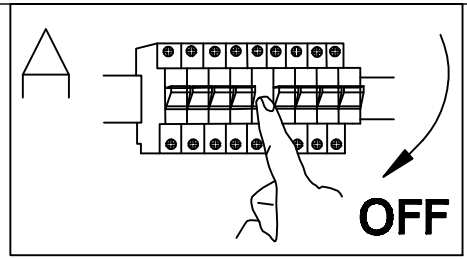

GLOBO
LIGHTING
www.globo-lighting.com

54845-3

B

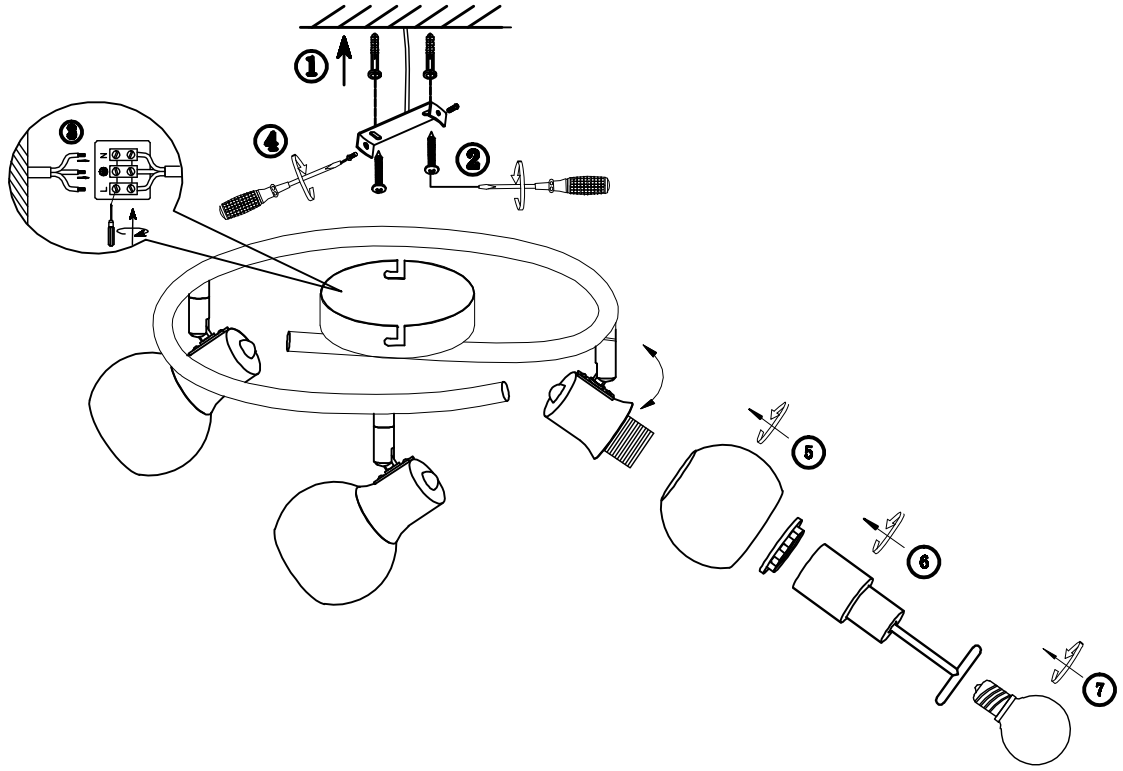

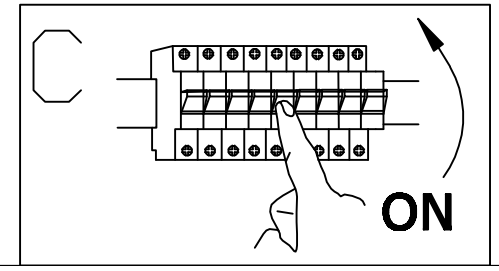

GLOBO Handels GmbH
St.Peter 38
A-9184 St.Jakob/Rosental